Machine Translated by Google

NSG2000 250V, Fast, High-Voltage Side **NMOS** Static Switching Driver

1. Product Features

• Wide operating range VIN: Up to 250V

• Features a 150ns propagation delay for fast turn-on and turn-off channels. • Built-in high-voltage side charging circuit enables 100% duty cycle.

ÿ Adjustable duty cycle

• The gate driver supply voltage is 4.5V to 20V.

ÿ VIN overvoltage lockout

• Driver power supply VCC undervoltage lockout

-- Undervoltage lockout positive threshold 4.2V

-- Undervoltage lockout negative threshold 4V

• Compatible with 3.3V, 5V and 15V input logic • TS negative voltage tolerance up to -9V

Wide temperature range -40°C to 125°C

• Output stage current sourcing/sinking capability: 290mA/600mA

• Compliant with RoHS standards

SOP8 (S)

2. Application Scope

• High-side switch controller •

Static switch driver

• Load and power switch drivers

• Electronic valve actuator

High-frequency high-voltage side gate driver

Photovoltaic shutdown device

3. Product Overview

The NSG2000 is a fast, high-voltage-side N-channel MOSFET gate...

The driver operates with an input voltage up to 250V. This device can realize a comprehensive enhancement of the external N-channel MOSFET switch.

The charging structure allows it to remain conductive indefinitely. Its powerful...

The driver can easily drive large gates with a very short switching time.

The presence of polarized capacitors makes them ideal for high-frequency switching applications or applications requiring high speed.

Static switching applications with fast turn-on and/or turn-off times.

The NSG2000 uses an SOP8 package and can operate from -40°C to 125°C.

Works within a certain range.

Device Information

Part Number	Packaging	Package size (nominal value)
NSG2000	**SOP8**	**4.9mm*3.9mm**

Simplified diagram

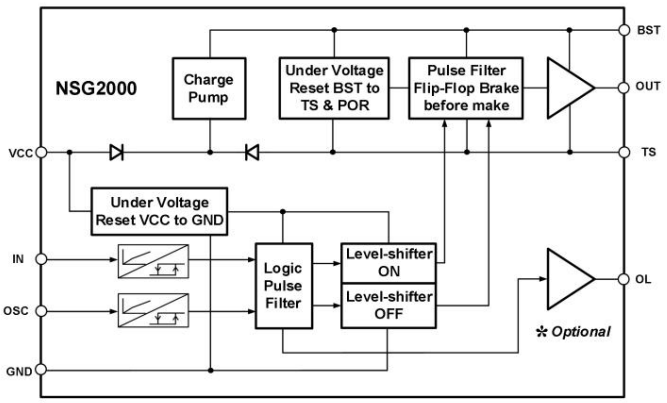

Confidential

Copyright © 2025, NSIC Technology (Wuxi) Co., LTD.

Machine Translated by Google

4. Product Selection

Product Model	Input signal	High-side undervoltage	Ton/Toff (ns)	IO+/IO- (mA)
NSG2000	IN	YES	150/150	290/600

5 Ordering Guide

Product Name	Marking	Packaging	Filling form	Minimum packaging quantity
NSG2000	NSG2000 XXXXX	SOP8	braided ribbon	4K/roll

6 Revision History

	Modifications	Modified time
Version V1.0 created		October 12, 2022
Version 1.1 adds typical application circuits;		2023.01.06
Version 1.2 adds typical application circuits 5 & 6;		2023.09.01
Version 1.3 updates typical circuit		2025.04.14
diagrams; Version 1.4 updates text descriptions.		2025.09.11

Confidential

Copyright © 2025, NSIC Technology (Wuxi) Co., LTD
Guogui Integrated Circuit Technology (Wuxi) Co., Ltd.

Machine Translated by Google

Table of contents

1. Product Characteristics.....1

2. Application Scope.....1

3. Product Overview.....1

4. Product Selection.....2

5. Ordering Guide.....2

6. Revision History.....2

7 -Pin Function Description..... 4

8. Product Specifications.....5

8.1 Limiting Operating Range.....5
8.2 ESD Ratings..... 5
8.3 Rated Power.....5 8.4 Thermal Information.....5 8.5 Recommended Operating Range.....5 8.6 Electrical Characteristics.....6

9. Function Description.....7

10 NSG2000 Description..... 8

10.1 Functional Block Diagram.....8 10.2 Typical Application Circuit.....8

11 Encapsulation Information..... 11

Confidential

Copyright © 2025, NSIC Technology (Wuxi) Co., LTD.

Machine Translated by Google

7 -pin function description

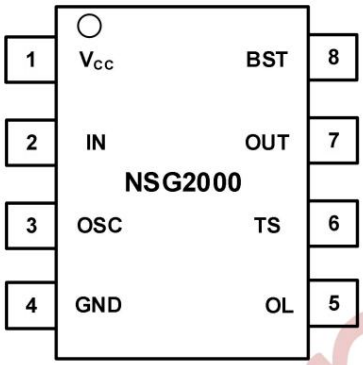

Figure **7-1** Top view of 8-foot **SOP**

Table **7-1** Chip Pin Descriptions

Number Name		Function
1	VCC	low voltage power supply
2	IN	signal input
3	OSC	OSC Input
4	GND	land
5	OL	Low-side output terminal
6	TS	Floating
7	OUT	Signal output
8	BST	Floating power supply

Confidential

Copyright © 2025, NSIC Technology (Wuxi) Co., LTD
Guogui Integrated Circuit Technology (Wuxi) Co., Ltd.

Machine Translated by Google

8 Product Specifications

8.1 Limiting operating range

Exceeding the maximum ratings may cause permanent damage to the device. All voltage ratings are referenced to GND at an ambient temperature of 25°C.

Symbol definition		Minimum	Maximum unit	
BST Floating Supply Voltage			275	V
TS Floating Ground Voltage		-0.3 BST – 25	BST + 0.3	
VO output voltage		TS -0.3	BST + 0.3	
VCC low voltage supply voltage		-0.3	25 Note	
VOL low-side output voltage		GND -0.3	VCC + 0.3	
VIN logic input voltage		GND -0.3	VCC + 0.3	
VOSC	OSC input voltage	GND -0.3	VCC + 0.3	
rate dV/dt	TS allows for transient voltage slew	—	50	V/ns

8.2 ESD ratings

Symbol definition: human		Rated value	unit
ESD	body discharge mode,	±2	kV
	machine discharge mode	±500	V

8.3 Rated Power

Symbol definition for		Minimum value	Maximum unit	
PD	package power (TA ÿ25°C)	—	0.625	W

8.4 Caloric Information

Symbol definition		Minimum value	Maximum unit	
RthJA thermal resistance junction		—	200 °C/W	
TJ	temperature	—	150	°C
TS storage temperature		-55	150	
TL pin temperature		—	300	

8.5 Recommended Work Scope

For proper operation, the device should be used under the following recommended conditions. The bias ratings for TS and GND were measured at a supply voltage of 15V.

Unless otherwise specified, all voltage parameter ratings are referenced to GND at an ambient temperature of 25°C.

Minimum value.			Maximum unit	
BST Floating supply voltage TS + 5 TS Floating ground voltage VO Output voltage VCC Low-			TS + 20	V
voltage supply voltage VOL		GND-9 Note 2	250	
Low-side output voltage		TS	BST	
VIN Logic input voltage OSC		5	20	
Input voltage VOSC Ambient		GND	VCC	
temperature TA		0	VCC	
		0	VCC	
		-40	125	°C

Note 1: All power supplies were tested at 25V.

Note 2: To ensure the chip functions properly, the range of TS needs to be maintained between -9V and 250V.

Confidential

Copyright © 2025, NSIC Technology (Wuxi) Co., LTD

Machine Translated by Google

8.6 Electrical Characteristics

Unless otherwise specified, TA = 25ÿ, VCC = BST = 15V, CL = 1nF.

8.6.1 Dynamic Parameter Characteristics

Symbol definition:	Minimum value, typical value, maximum value, unit, test conditions				
tON (on-end transmission	— 150		220	ns	TS=0/250V
delay) , tOFF (off-end	— 150		220	ns	TS=0V
transmission delay) , tR (on-	— 70		170	ns	
end rise time) , tF (off-end fall	— 30		90	ns	

time) . **8.6.2** Static Parameter Characteristics

Unless otherwise specified, VCC=BST=15V, TA= 25ÿ. The VIH, VIL, and IIN parameters are referenced from GND and apply accordingly to the input pin IN. VO

The IO parameters are referenced to GND and applied accordingly to the output pin OUT.

Symbol definition: VCC	Minimum value, typical value, maximum value, unit, test conditions				
VCCUV+ undervoltage positive threshold	3.4	4.2	5	V	
VCCUV-CC Undervoltage Negative Threshold	3.2	4.0	4.8	V	
BSTUV+ BST Undervoltage Positive Threshold	3.4	4.2	5	V	
BSTUV - BST Undervoltage Negative Threshold	3.2	4.0	4.8	V	
ILK high-side floating power supply leakage current	— — 50			ÿA	BST=TS=250V
IQBST BST Static Current	— 50		75	ÿA All inputs are off	
IQCC VCC Static Current	— 120		250	ÿA	Closed state
VIH input logic high level threshold voltage	2.5 — — V VCC=10Vto 20V				
VIL input logic low level threshold voltage	— — 0.8			V VCC = 10V to 20V	
VOH output high-level voltage drop BST – VO	— 0.05		0.2	V	IO=2mA
VOL output low level voltage drop VO	— 0.02		0.1	V	
IIN+ logic "1" input bias current	— 3		10	ÿA	VIN = 5V
IIN - Logic "0" Input Bias Current	— — 5			ÿA	VIN = 0V
IO+ output current pulling	200	290 —	mA		VO=0V PWÿ10us
IO- output sink current	420	600 —	mA		VO=15V PWÿ10us
Internal resistance of RBSD high-voltage side charging circuit	— 200 — ÿ				IBSD=1mA
VBSD high-voltage side charging circuit on-state voltage drop	— 0.6 — V				IBSD=1mA

Confidential

Copyright © 2025, NSIC Technology (Wuxi) Co., LTD
Guogui Integrated Circuit Technology (Wuxi) Co., Ltd.

Machine Translated by Google

9. Function Description

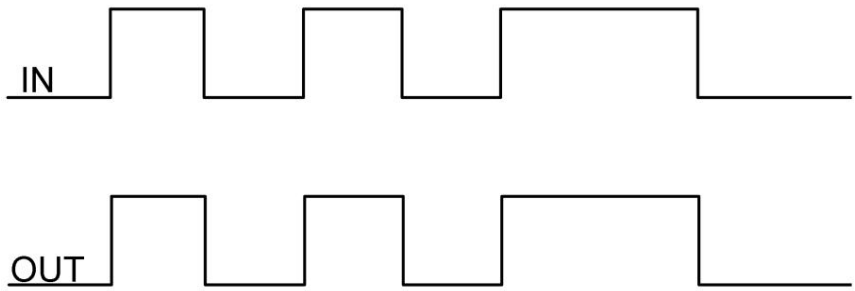

Figure **9-1 NSG2000** input/output timing waveforms

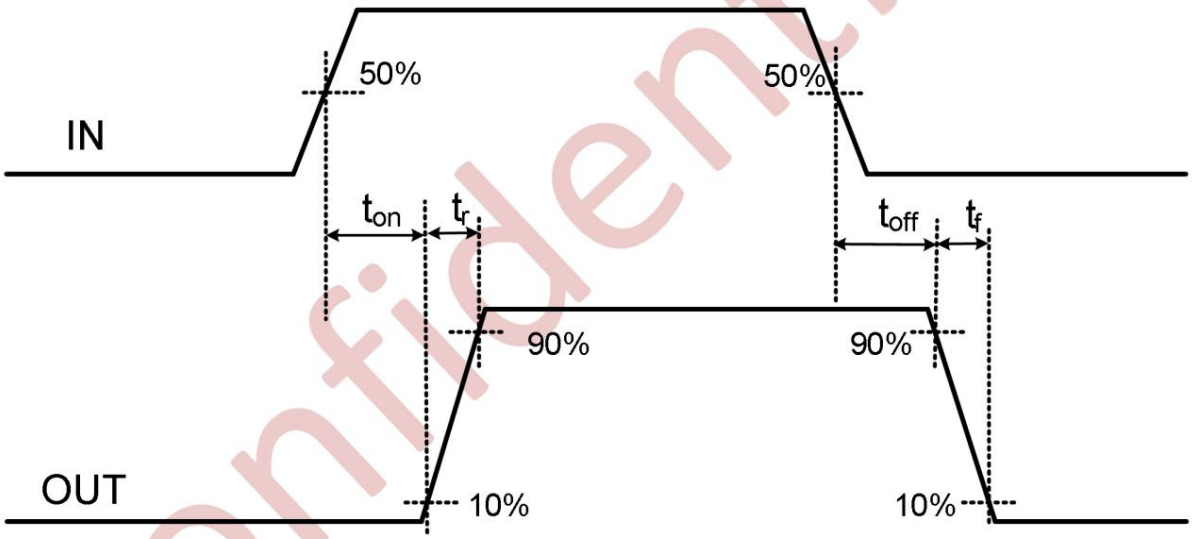

Figure **9-2** Switch waveform definition

Confidential

Copyright © 2025, NSIC Technology (Wuxi) Co., LTD.

Machine Translated by Google

10 NSG2000 Specifications

10.1 Functional Block Diagram

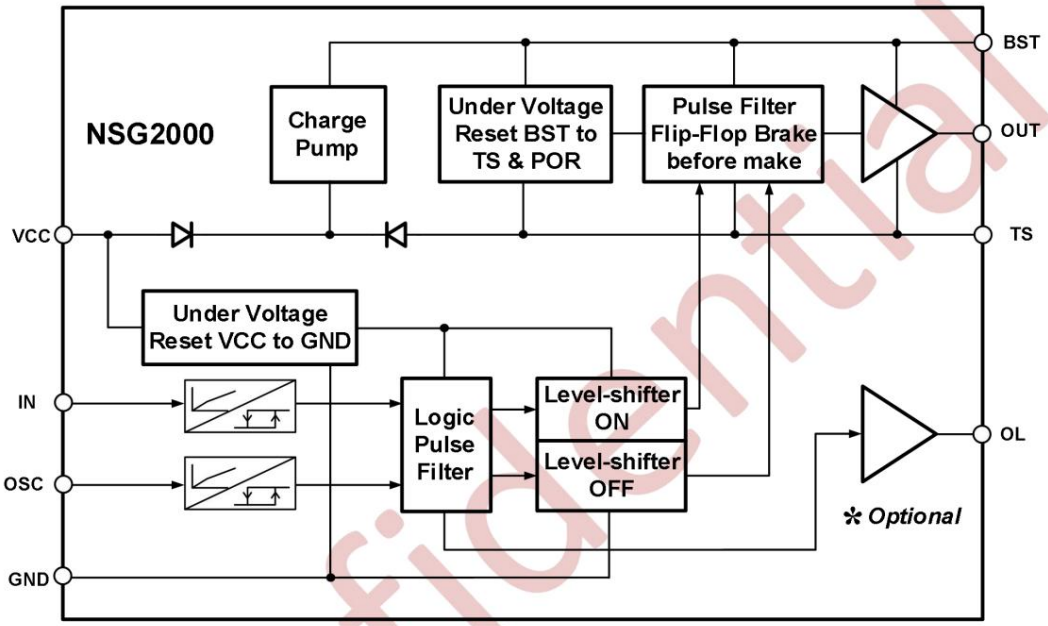

Figure **10-1** Functional Block Diagram of NSG2000

10.2 Typical Application Circuits

(Note: DZ2 and DZ1 are Zener diodes; the BV voltage must be 2V~3V higher than the VCC voltage; the RL resistor should be a 1206 or 0805 package.)

The TS negative pulse amplitude on the PCB board is relatively large. A Schottky diode should be connected in reverse from TS to ground to absorb the negative voltage energy. The IN pin should be powered on later than VCC to ensure reliable output.

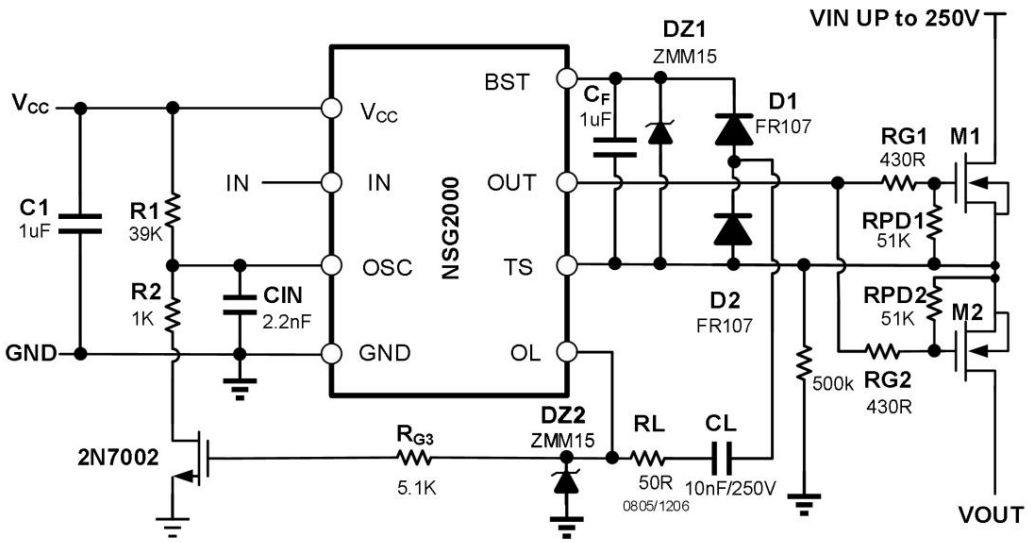

Figure **10-2** Typical application circuit diagram **1**

Copyright © 2025, NSIC Technology (Wuxi) Co., LTD.

Machine Translated by Google

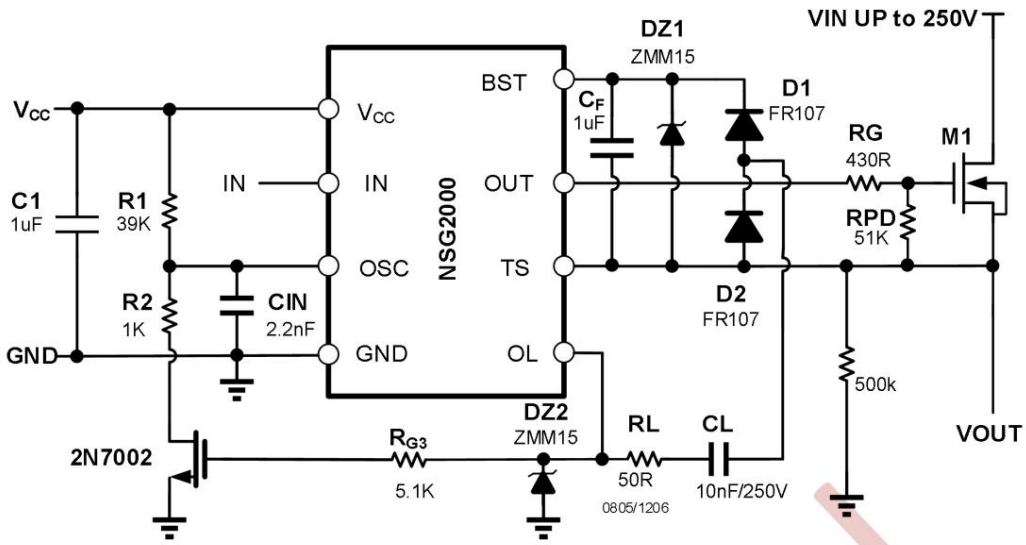

Figure **10-3** Typical application circuit diagram **2**

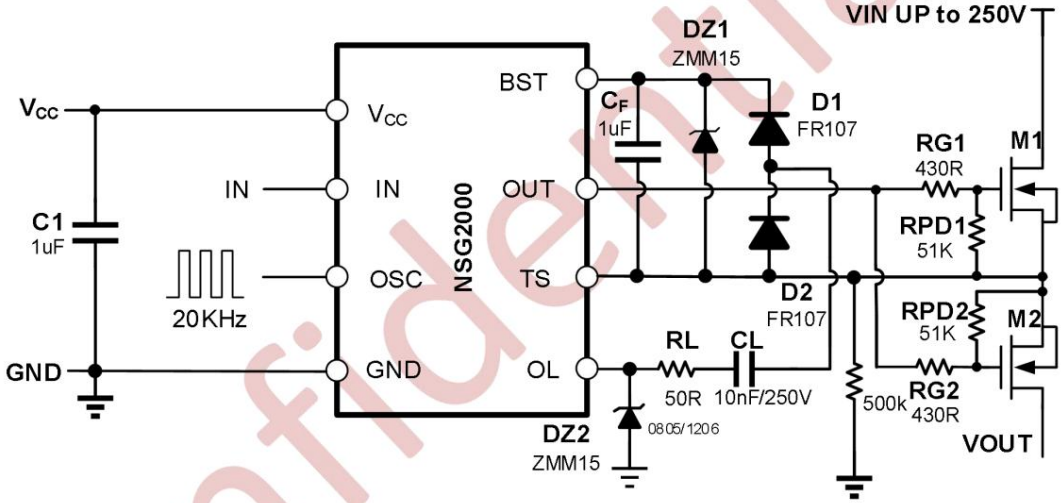

Figure **10-4** Typical application circuit diagram **3**

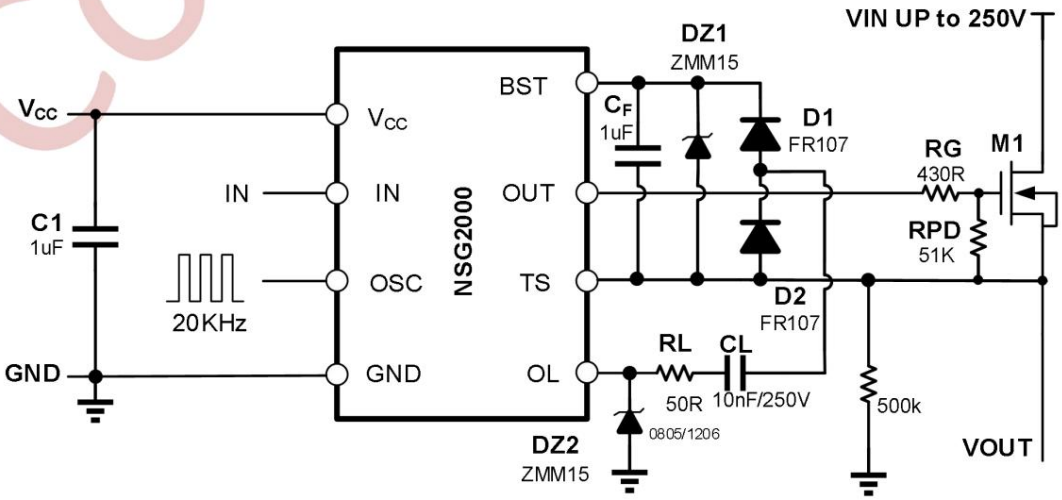

Figure **10-5** Typical application circuit diagram **4**

Confidential

Copyright © 2025, NSIC Technology (Wuxi) Co., LTD.

Machine Translated by Google

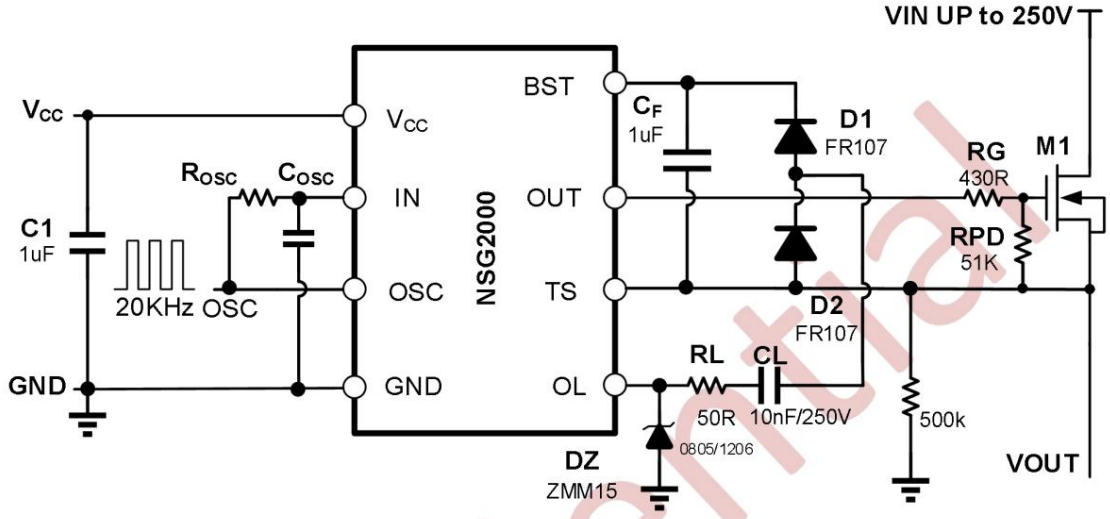

Figure **10-6** Typical application circuit diagram **5**

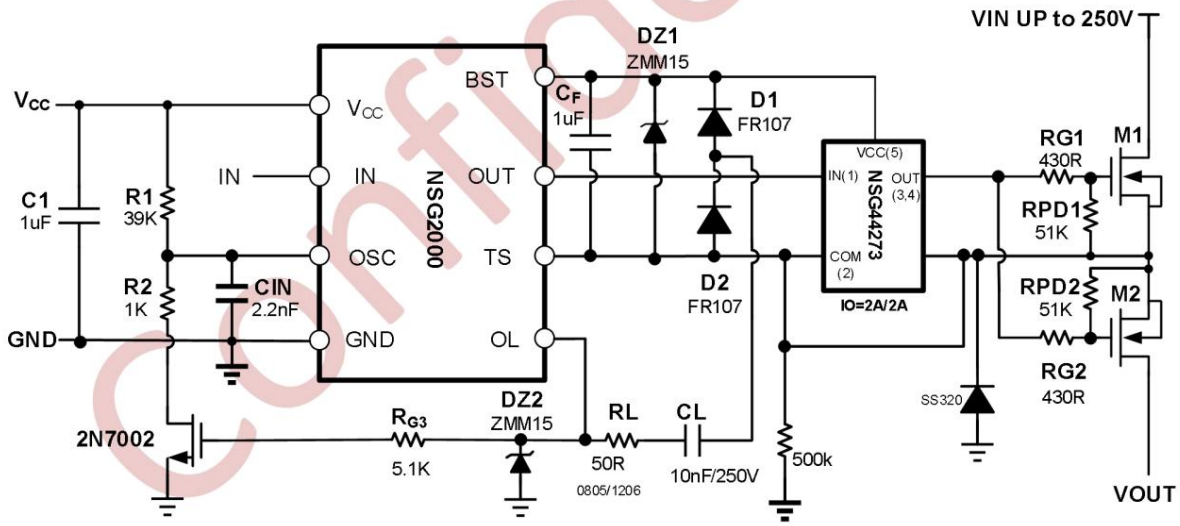

Figure **10-7** shows the current-to- **2A/2A** capability using **NSG44273.**

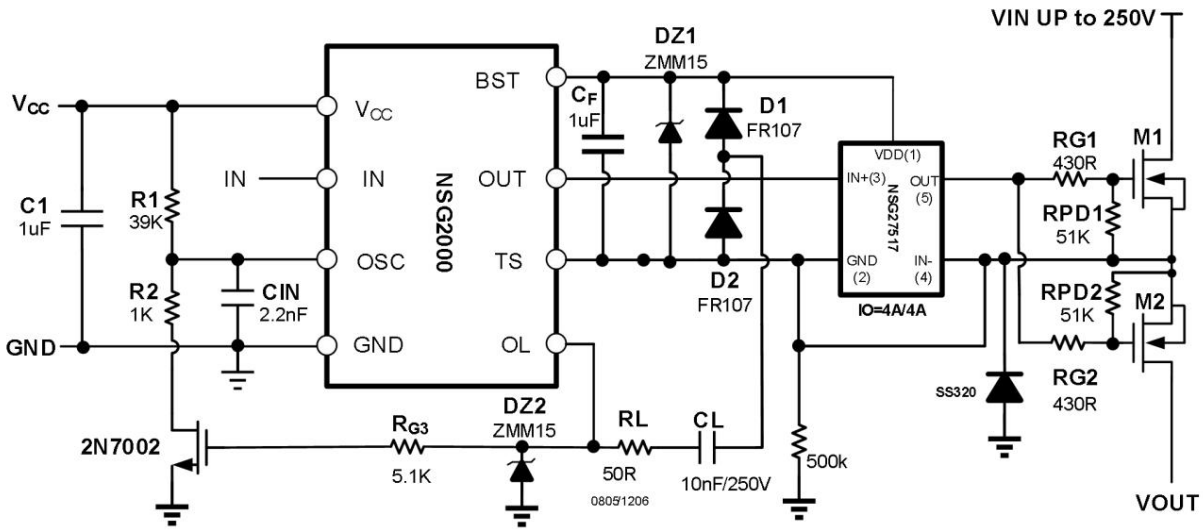

Figure **10-8** shows the current-to- **4A/4A** capability using **NSG27517.**

Confidential

Copyright © 2025, NSIC Technology (Wuxi) Co., LTD.

Machine Translated by Google

11 Packaging Information

SOP-8 Package Dimensions

Size / Symbol	MIN(mm)	TYP(mm)	MAX(mm)	Size / Symbol	MIN(mm)	TYP(mm)	MAX(mm)
A	-	-	1.75	D	4.70	4.90	5.10
A1	0.10	-	0.225	E	5.80	6.00	6.20
A2	1.30	1.40	1.50	E1	3.70	3.90	4.10
A3	0.60	0.65	0.70			1.27 BSC	
	0.39	-	0.48	eh	0.25	-	0.50
b b1	0.38	0.41	0.43	L		0.50	
c	0.21	-	0.26	L1	1.05BSC		
c1	0.19	0.20	0.21	ÿ	0	-	8°

SOP-8 Package Outlines

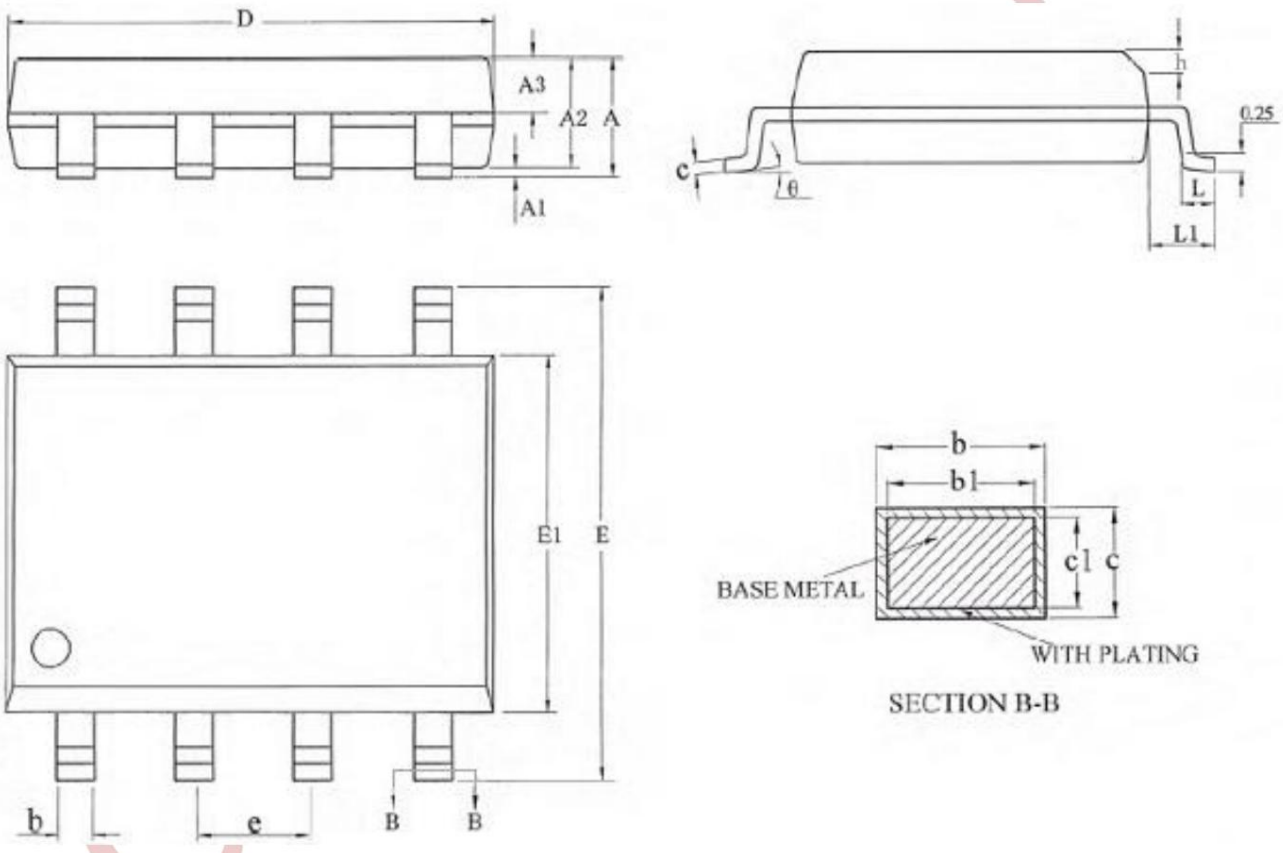

Copyright © 2025, NSIC Technology (Wuxi) Co., LTD